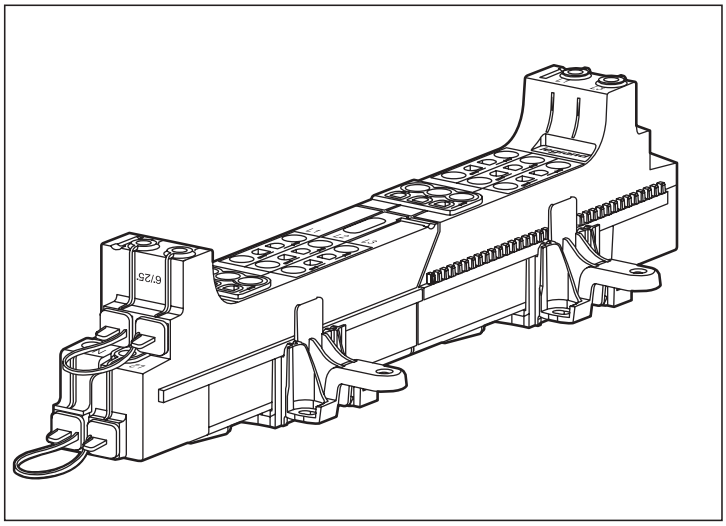

	4050 23	4050 24	4050 25	4050 26
X 2 / X 1 / X 1	x 2	x 2	x 3	x 3

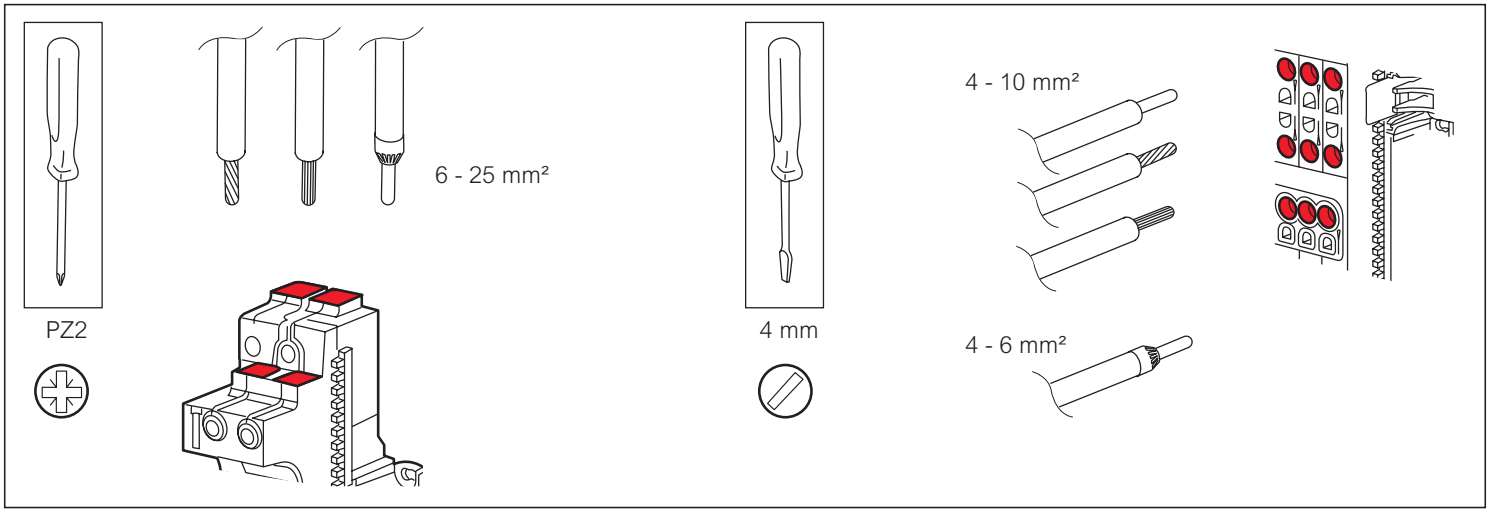

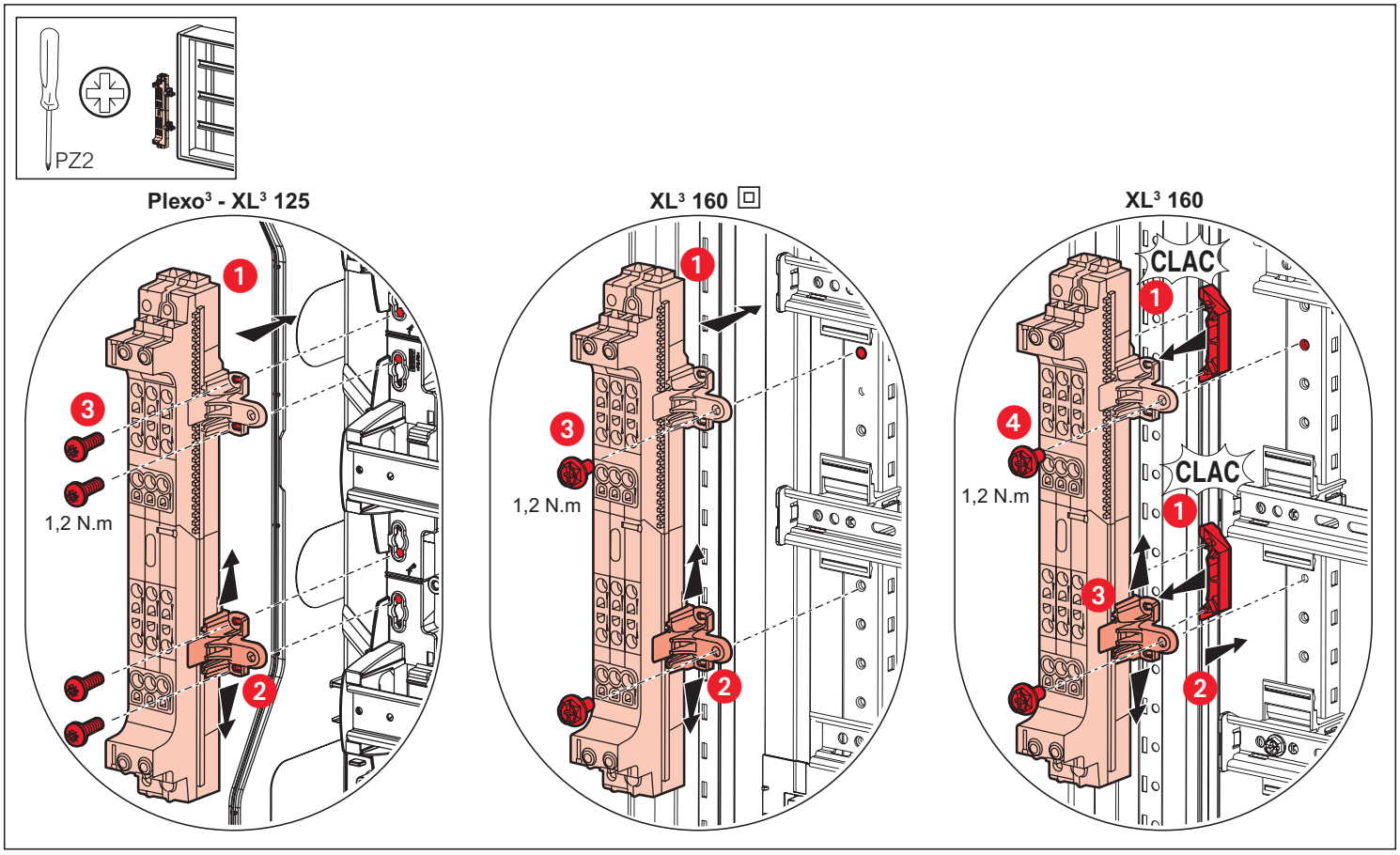

LE04826AA_02

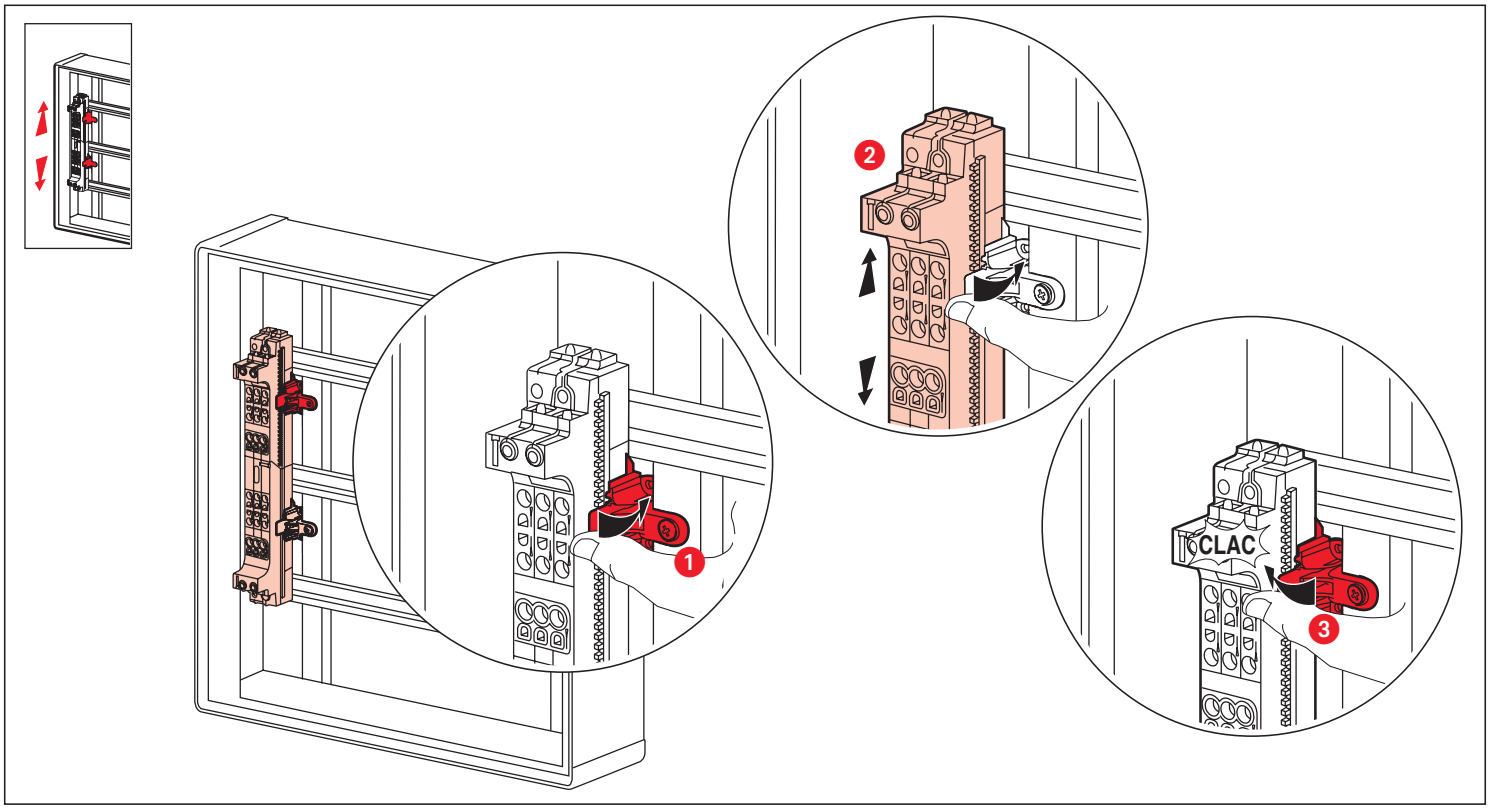
CLAC

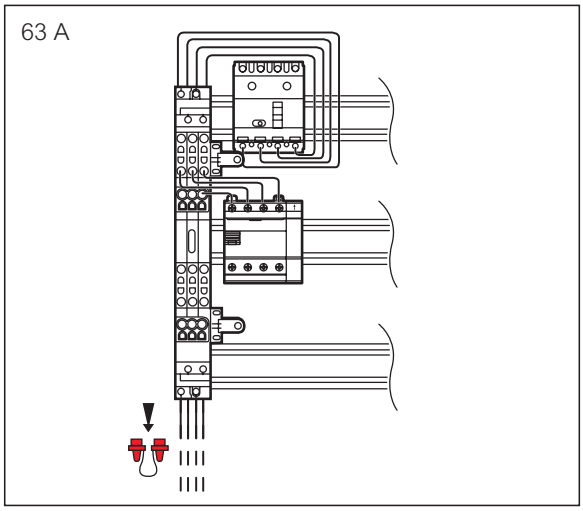
63 A

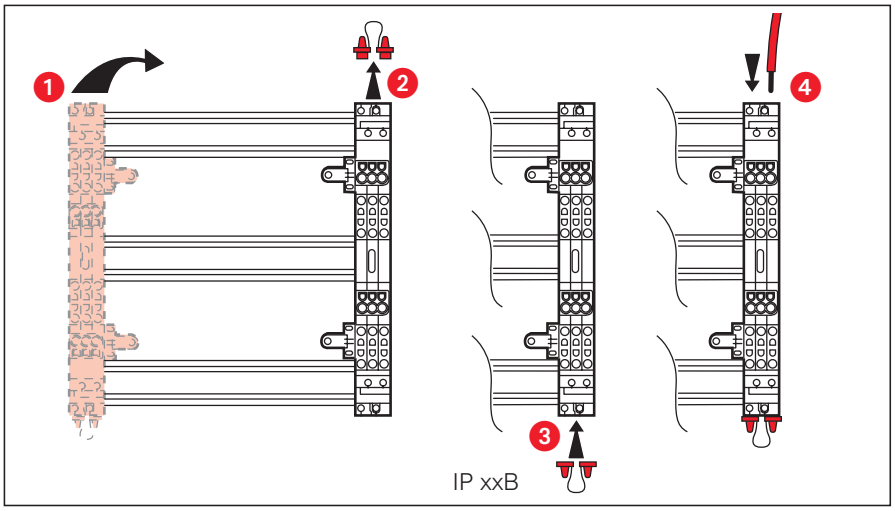
IP xxB

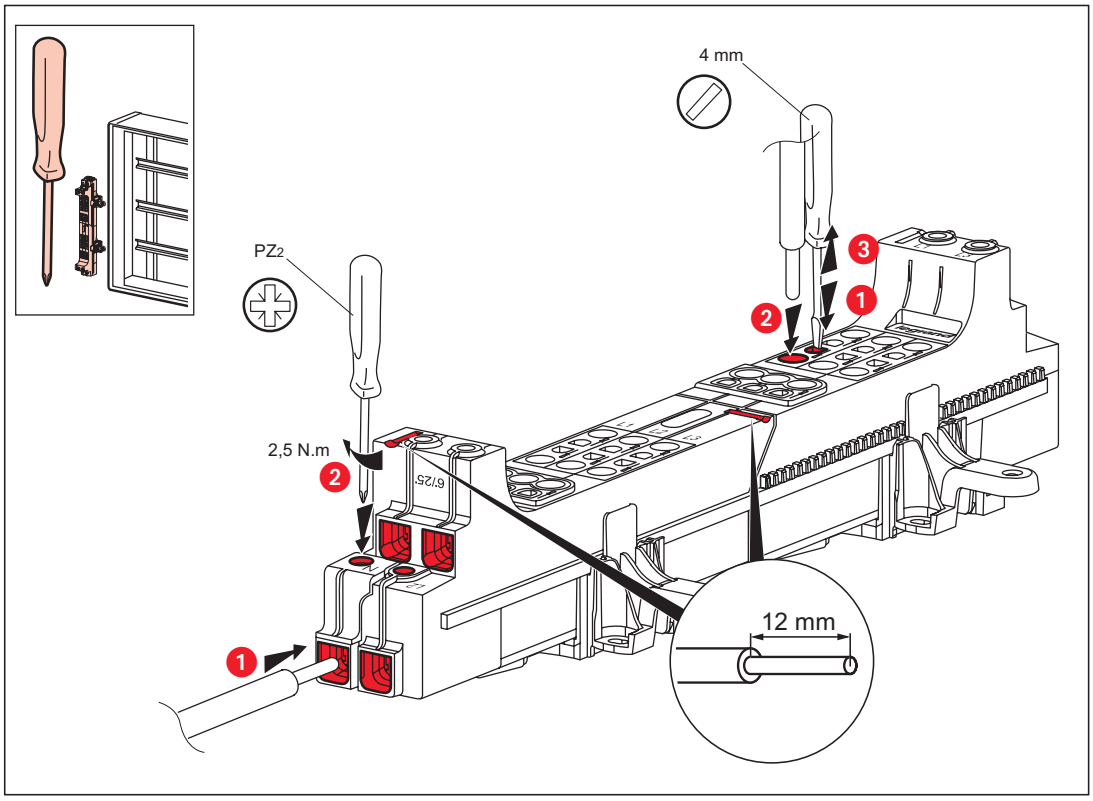
4 mm
PZ2
2,5 N.m
6/25
12 mm

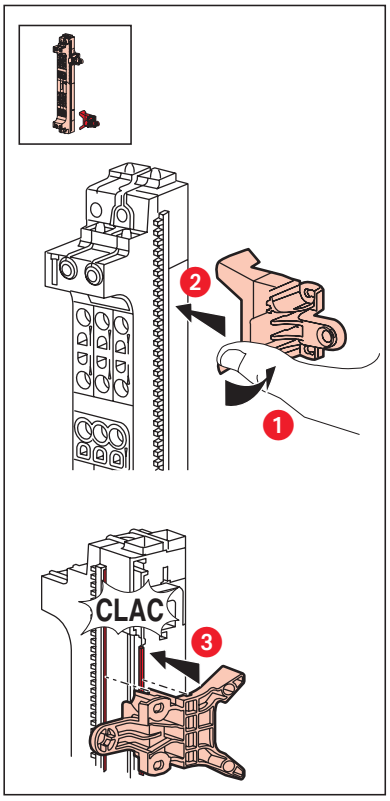
CLAC